DUAL D-TYPE POSITIVE-EDGE-TRIGGERED FLIP-FLOPS WITH PRESET AND CLEAR

SDLS119 – DECEMBER 1983 – REVISED MARCH 1988

- **Package Options Include Plastic "Small Outline" Packages, Ceramic Chip Carriers and Flat Packages, and Plastic and Ceramic DIPs**
- **Dependable Texas Instruments Quality and Reliability**

description

These devices contain two independent D-type positive-edge-triggered flip-flops. A low level at the preset or clear inputs sets or resets the outputs regardless of the levels of the other inputs. When preset and clear are inactive (high), data at the D input meeting the setup time requirements are transferred to the outputs on the positive-going edge of the clock pulse. Clock triggering occurs at a voltage level and is not directly related to the rise time of the clock pulse. Following the hold time interval, data at the D input may be changed without affecting the levels at the outputs.

The SN54′ family is characterized for operation over the full military temperature range of −55°C to 125°C. The SN74′ family is characterized for operation from 0°C to 70°C.

Datasheet.Global

FUNCTION TABLE

INPUTS				OUTPUTS	
$\overline{PRE}$	$\overline{CLR}$	CLK	D	Q	$\overline{Q}$
L	H	X	X	H	L
H	L	X	X	L	H
L	L	X	X	H†	H†
H	H	↑	H	H	L
H	H	↑	L	L	H
H	H	L	X	Q_0	$\overline{Q}_0$

† The output levels in this configuration are not guaranteed to meet the minimum levels in V_{OH} if the lows at preset and clear are near V_{IL} maximum. Furthermore, this configuration is nonstable; that is, it will not persist when either preset or clear returns to its inactive (high) level.

SN5474 . . . J PACKAGE
SN54LS74A, SN54S74 . . . J OR W PACKAGE
SN7474 . . . N PACKAGE
SN74LS74A, SN74S74 . . . D OR N PACKAGE
(TOP VIEW)

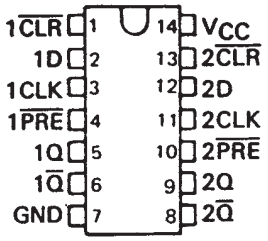

SN5474 . . . W PACKAGE
(TOP VIEW)

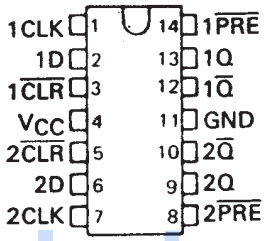

SN54LS74A, SN54S74 . . . FK PACKAGE
(TOP VIEW)

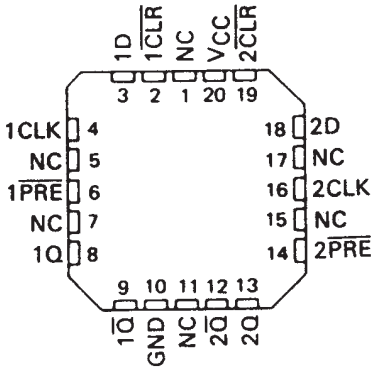

NC - No internal connection

logic symbol‡

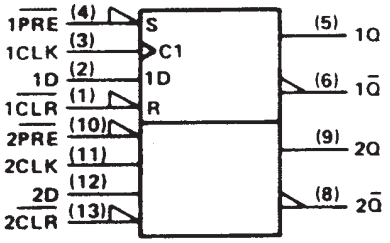

‡This symbol is in accordance with ANSI/IEEE Std 91-1984 and IEC Publication 617-12.
Pin numbers shown are for D, J, N, and W packages.

logic diagram (positive logic)

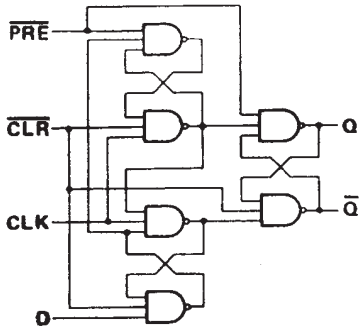

PRODUCTION DATA information is current as of publication date. Products conform to specifications per the terms of Texas Instruments standard warranty. Production processing does not necessarily include testing of all parameters.

Copyright © 1988, Texas Instruments Incorporated

schematics of inputs and outputs

'74

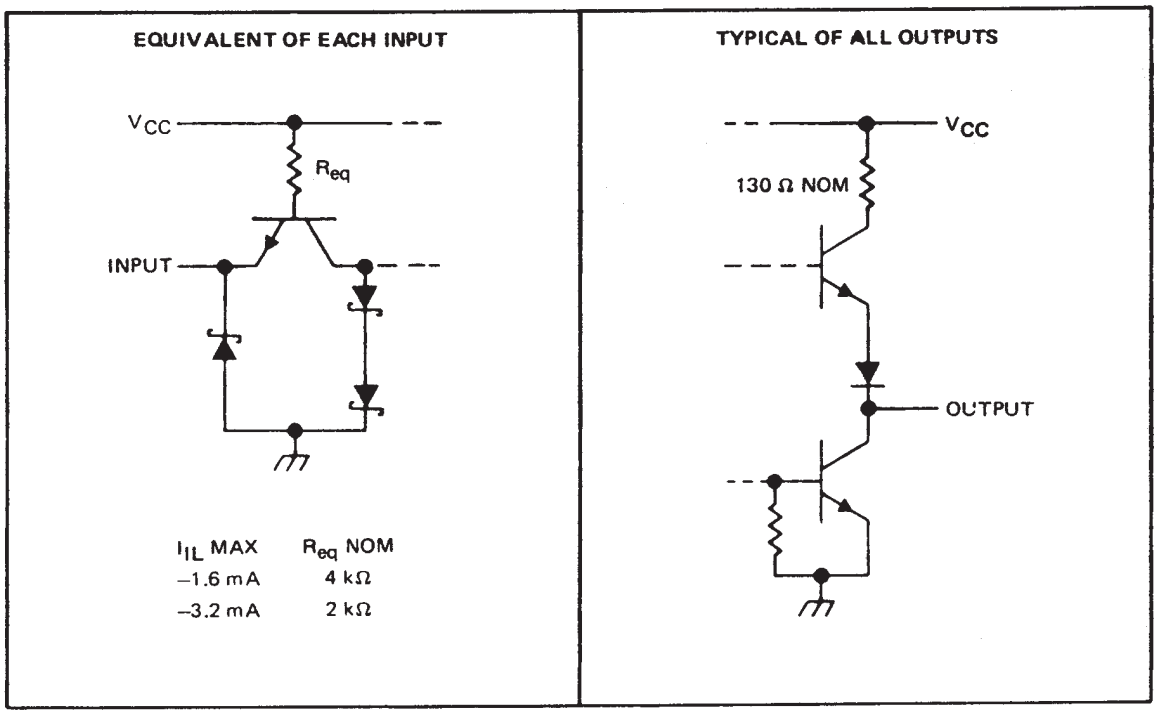

I_{IL} MAX	R_{eq} NOM
–1.6 mA	4 kΩ
–3.2 mA	2 kΩ

'S74

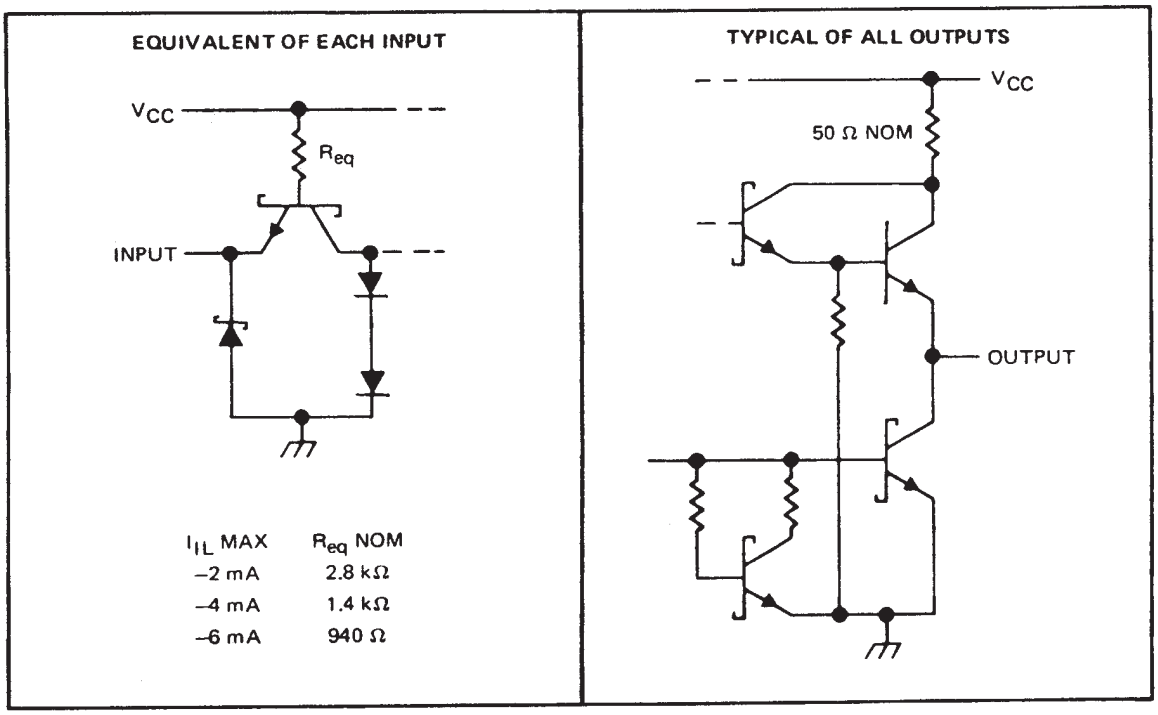

I_{IL} MAX	R_{eq} NOM
–2 mA	2.8 kΩ
–4 mA	1.4 kΩ
–6 mA	940 Ω

schematic

'LS74A

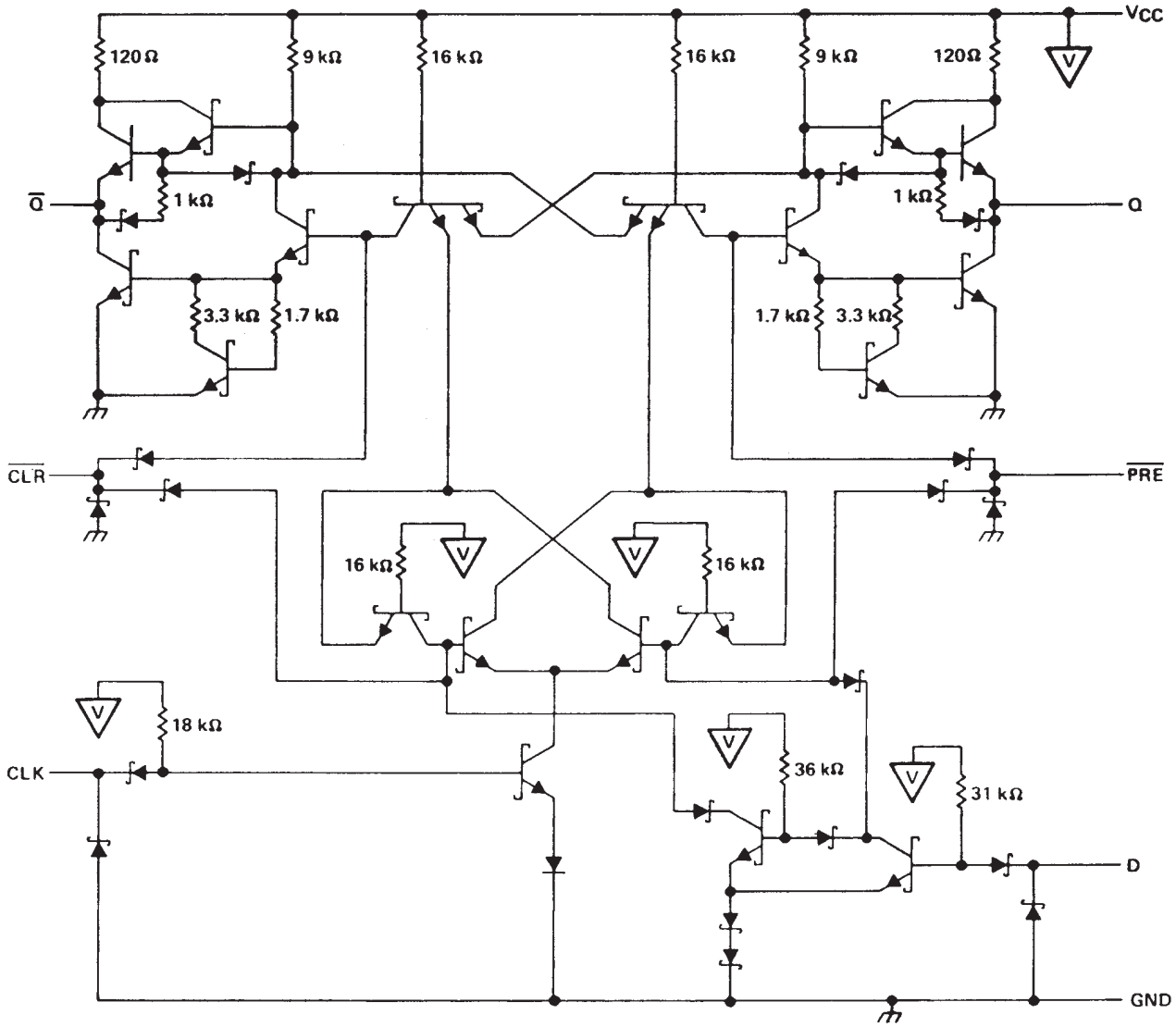

absolute maximum ratings over operating free-air temperature range (unless otherwise noted)

Supply voltage, V_{CC} (see Note 1) . . . . . 7 V
Input voltage: '74, 'S74 . . . . . 5.5 V
'LS74A . . . . . 7 V
Operating free-air temperature range: SN54' . . . . . −55°C to 125°C
SN74' . . . . . 0°C to 70°C
Storage temperature range . . . . . −65°C to 150°C

NOTE 1: Voltage values are with respect to network ground terminal.

recommended operating conditions

			SN5474			SN7474			UNIT
			MIN	NOM	MAX	MIN	NOM	MAX	
V_{CC}	Supply voltage		4.5	5	5.5	4.75	5	5.25	V
V_{IH}	High-level input voltage		2			2			V
V_{IL}	Low-level input voltage				0.8			0.8	V
I_{OH}	High-level output current				– 0.4			– 0.4	mA
I_{OL}	Low-level output current				16			16	mA
t_w	Pulse duration	CLK high	30			30			ns
		CLK low	37			37			
		$\overline{PRE}$ or $\overline{CLR}$ low	30			30			
t_{su}	Input setup time before CLK ↑		20			20			ns
t_h	Input hold time-data after CLK ↑		5			5			ns
T_A	Operating free-air temperature		– 55		125	0		70	°C

electrical characteristics over recommended operating free-air temperature range (unless otherwise noted)

PARAMETER		TEST CONDITIONS†	SN5474			SN7474			UNIT
			MIN	TYP‡	MAX	MIN	TYP‡	MAX	
V_{IK}		V_{CC} = MIN, I_I = – 12 mA			– 1.5			– 1.5	V
V_{OH}		V_{CC} = MIN, V_{IH} = 2 V, V_{IL} = 0.8 V, I_{OH} = – 0.4 mA	2.4	3.4		2.4	3.4		V
V_{OL}		V_{CC} = MIN, V_{IH} = 2 V, V_{IL} = 0.8 V, I_{OL} = 16 mA		0.2	0.4		0.2	0.4	V
I_I		V_{CC} = MAX, V_I = 5.5 V			1			1	mA
I_{IH}	D	V_{CC} = MAX, V_I = 2.4 V			40			40	μA
	$\overline{CLR}$				120			120	
	All Other				80			80	
I_{IL}	D	V_{CC} = MAX, V_I = 0.4 V			– 1.6			– 1.6	mA
	$\overline{PRE}$§				– 1.6			– 1.6	
	$\overline{CLR}$§				– 3.2			– 3.2	
	CLK				– 3.2			– 3.2	
I_{OS}¶		V_{CC} = MAX	– 20		– 57	– 18		– 57	mA
I_{CC}#		V_{CC} = MAX, See Note 2		8.5	15		8.5	15	mA

†For conditions shown as MIN or MAX, use the appropriate value specified under recommended operating conditions.
‡All typical values are at V_{CC} = 5 V, T_A = 25°C.
§Clear is tested with preset high and preset is tested with clear high.
¶Not more than one output should be shown at a time.
#Average per flip-flop.
NOTE 2: With all outputs open, I_{CC} is measured with the Q and $\overline{Q}$ outputs high in turn. At the time of measurement, the clock input is grounded.

switching charateristics, V_{CC} = 5 V, T_A = 25°C (see note 3)

PARAMETER	FROM (INPUT)	TO (OUTPUT)	TEST CONDITIONS	MIN	TYP	MAX	UNIT
f_{max}			R_L = 400 Ω, C_L = 15 pF	15	25		MHz
t_{PLH}	$\overline{PRE}$ or $\overline{CLR}$	Q or $\overline{Q}$				25	ns
t_{PHL}						40	ns
t_{PLH}	CLK	Q or $\overline{Q}$			14	25	ns
t_{PHL}					20	40	ns

NOTE 3: Load circuits and voltage waveforms are shown in Section 1.

recommended operating conditions

			SN54LS74A			SN74LS74A			UNIT
			MIN	NOM	MAX	MIN	NOM	MAX	
V_{CC}	Supply voltage		4.5	5	5.5	4.75	5	5.25	V
V_{IH}	High-level input voltage		2			2			V
V_{IL}	Low-level input voltage				0.7			0.8	V
I_{OH}	High-level output current				– 0.4			– 0.4	mA
I_{OL}	Low-level output current				4			8	mA
f_{clock}	Clock frequency		0		25	0		25	MHz
t_w	Pulse duration	CLK high	25			25			ns
		$\overline{PRE}$ or $\overline{CLR}$ low	25			25			
t_{su}	Setup time-before CLK↑	High-level data	20			20			ns
		Low-level data	20			20			
t_h	Hold time-data after CLK↑		5			5			ns
T_A	Operating free-air temperature		– 55		125	0		70	°C

electrical characteristics over recommended operating free-air temperature range (unless otherwise noted)

PARAMETER		TEST CONDITIONS†			SN54LS74A			SN74LS74A			UNIT
					MIN	TYP‡	MAX	MIN	TYP‡	MAX	
V_{IK}		V_{CC} = MIN,	I_I = – 18 mA				– 1.5			– 1.5	V
V_{OH}		V_{CC} = MIN, I_{OH} = – 0.4 mA	V_{IH} = 2 V,	V_{IL} = MAX,	2.5	3.4		2.7	3.4		V
V_{OL}		V_{CC} = MIN, I_{OL} = 4 mA	V_{IL} = MAX,	V_{IH} = 2 V,		0.25	0.4		0.25	0.4	V
		V_{CC} = MIN, I_{OL} = 8 mA	V_{IL} = MAX,	V_{IH} = 2 V,					0.35	0.5	
I_I	D or CLK	V_{CC} = MAX,	V_I = 7 V				0.1			0.1	mA
	$\overline{CLR}$ or $\overline{PRE}$						0.2			0.2	
I_{IH}	D or CLK	V_{CC} = MAX,	V_I = 2.7 V				20			20	μA
	$\overline{CLR}$ or $\overline{PRE}$						40			40	
I_{IL}	D or CLK	V_{CC} = MAX,	V_I = 0.4 V				– 0.4			– 0.4	mA
	$\overline{CLR}$ or $\overline{PRE}$						– 0.8			– 0.8	
I_{OS}§		V_{CC} = MAX,	See Note 4		– 20		– 100	– 20		– 100	mA
I_{CC} (Total)		V_{CC} = MAX,	See Note 2			4	8		4	8	mA

† For conditions shown as MIN or MAX, use the appropriate value specified under recommended operating conditions.
‡ All typical values are at V_{CC} = 5 V, T_A = 25°C.
§ Not more than one output should be shorted at a time, and the duration of the short circuit should not exceed one second.
NOTE 2: With all outputs open, I_{CC} is measured with the Q and $\overline{Q}$ outputs high in turn. At the time of measurement, the clock input is grounded.
NOTE 4: For certain devices where state commutation can be caused by shorting an output to ground, an equivalent test may be performed with V_O = 2.25 V and 2.125 V for the 54 family and the 74 family, respectively, with the minimum and maximum limits reduced to one half of their stated values.

switching characteristics, V_{CC} = 5 V, T_A = 25°C (see note 3)

PARAMETER	FROM (INPUT)	TO (OUTPUT)	TEST CONDITIONS		MIN	TYP	MAX	UNIT
f_{max}			R_L = 2 kΩ,	C_L = 15 pF	25	33		MHz
t_{PLH}	$\overline{CLR}$, $\overline{PRE}$ or CLK	Q or $\overline{Q}$				13	25	ns
t_{PHL}						25	40	ns

Note 3: Load circuits and voltage waveforms are shown in Section 1.

recommended operating conditions

			SN54S74			SN74S74			UNIT
			MIN	NOM	MAX	MIN	NOM	MAX	
V_{CC}	Supply voltage		4.5	5	5.5	4.75	5	5.25	V
V_{IH}	High-level input voltage		2			2			V
V_{IL}	Low-level input voltage				0.8			0.8	V
I_{OH}	High-level output current				– 1			– 1	mA
I_{OL}	Low-level output current				20			20	mA
t_w	Pulse duration	CLK high	6			6			ns
		CLK low	7.3			7.3			
		$\overline{CLR}$ or $\overline{PRE}$ low	7			7			
t_{su}	Setup time, before CLK ↑	High-level data	3			3			ns
		Low-level data	3			3			
t_h	Input hold time - data after CLK ↑		2			2			ns
T_A	Operating free-air temperature		– 55		125	0		70	°C

electrical characteristics over recommended operating free-air temperature range (unless otherwise noted)

PARAMETER		TEST CONDITIONS†		SN54S74			SN74S74			UNIT
				MIN	TYP‡	MAX	MIN	TYP‡	MAX	
V_{IK}		V_{CC} = MIN,	I_I = – 18 mA,			– 1.2			– 1.2	V
V_{OH}		V_{CC} = MIN, I_{OH} = – 1 mA	V_{IH} = 2 V, V_{IL} = 0.8 V,	2.5	3.4		2.7	3.4		V
V_{OL}		V_{CC} = MIN, I_{OL} = 20 mA	V_{IH} = 2 V, V_{IL} = 0.8 V,			0.5			0.5	V
I_I		V_{CC} = MAX,	V_I = 5.5 V			1			1	mA
I_{IH}	D	V_{CC} = MAX,	V_I = 2.7 V			50			50	μA
	$\overline{CLR}$					150			150	
	$\overline{PRE}$ or CLK					100			100	
I_{IL}	D	V_{CC} = MAX,	V_I = 0.5 V			– 2			– 2	mA
	$\overline{CLR}$¶					– 6			– 6	
	$\overline{PRE}$¶					– 4			– 4	
	CLK					– 4			– 4	
I_{OS}§		V_{CC} = MAX		– 40		– 100	– 40		– 100	mA
I_{CC}#		V_{CC} = MAX,	See Note 2		15	25		15	25	mA

†For conditions shown as MIN or MAX, use the appropriate value specified under recommended operating conditions.
‡All typical values are at V_{CC} = 5 V, T_A = 25°C.
§Not more than one output should be shorted at a time, and the duration of the short circuit should not exceed one second.
¶Clear is tested with preset high and preset is tested with clear high.
#Average per flip-flop.
NOTE 2: With all outputs open, I_{CC} is measured with the Q and $\overline{Q}$ outputs high in turn. At the time of measurement, the clock input is grounded.

switching characteristics, V_{CC} = 5 V, T_A = 25°C (see note 3)

PARAMETER	FROM (INPUT)	TO (OUTPUT)	TEST CONDITIONS	MIN	TYP	MAX	UNIT
f_{max}			R_L = 280 Ω, C_L = 15 pF	75	110		MHz
t_{PLH}	$\overline{PRE}$ or $\overline{CLR}$	Q or $\overline{Q}$			4	6	ns
t_{PHL}	$\overline{PRE}$ or $\overline{CLR}$ (CLK high)	$\overline{Q}$ or Q			9	13.5	ns
	$\overline{PRE}$ or $\overline{CLR}$ (CLK low)				5	8	
t_{PLH}	CLK	Q or $\overline{Q}$			6	9	ns
t_{PHL}					6	9	ns

NOTE 3: Load circuits and voltage waveforms are shown in Section 1.

PACKAGING INFORMATION

Orderable Device	Status (1)	Package Type	Package Drawing	Pins	Package Qty	Eco Plan (2)	Lead/Ball Finish	MSL Peak Temp (3)
JM38510/00205BCA	OBSOLETE	CDIP	J	14		TBD	Call TI	Call TI
JM38510/00205BDA	OBSOLETE	CFP	W	14		TBD	Call TI	Call TI
JM38510/00205BDA	OBSOLETE	CFP	W	14		TBD	Call TI	Call TI
JM38510/07101BCA	ACTIVE	CDIP	J	14	1	TBD	Call TI	Level-NC-NC-NC
JM38510/07101BCA	ACTIVE	CDIP	J	14	1	TBD	Call TI	Level-NC-NC-NC
JM38510/07101BDA	ACTIVE	CFP	W	14	1	TBD	Call TI	Level-NC-NC-NC
JM38510/07101BDA	ACTIVE	CFP	W	14	1	TBD	Call TI	Level-NC-NC-NC
JM38510/30102B2A	ACTIVE	LCCC	FK	20	1	TBD	Call TI	Level-NC-NC-NC
JM38510/30102B2A	ACTIVE	LCCC	FK	20	1	TBD	Call TI	Level-NC-NC-NC
JM38510/30102BCA	ACTIVE	CDIP	J	14	1	TBD	Call TI	Level-NC-NC-NC
JM38510/30102BCA	ACTIVE	CDIP	J	14	1	TBD	Call TI	Level-NC-NC-NC
JM38510/30102BDA	ACTIVE	CFP	W	14	1	TBD	Call TI	Level-NC-NC-NC
JM38510/30102BDA	ACTIVE	CFP	W	14	1	TBD	Call TI	Level-NC-NC-NC
JM38510/30102SCA	ACTIVE	CDIP	J	14	1	TBD	Call TI	Level-NC-NC-NC
JM38510/30102SCA	ACTIVE	CDIP	J	14	1	TBD	Call TI	Level-NC-NC-NC
JM38510/30102SDA	ACTIVE	CFP	W	14	1	TBD	Call TI	Level-NC-NC-NC
JM38510/30102SDA	ACTIVE	CFP	W	14	1	TBD	Call TI	Level-NC-NC-NC
SN5474J	OBSOLETE	CDIP	J	14		TBD	Call TI	Call TI
SN5474J	OBSOLETE	CDIP	J	14		TBD	Call TI	Call TI
SN54LS74AJ	ACTIVE	CDIP	J	14	1	TBD	Call TI	Level-NC-NC-NC
SN54LS74AJ	ACTIVE	CDIP	J	14	1	TBD	Call TI	Level-NC-NC-NC
SN54S74J	ACTIVE	CDIP	J	14	1	TBD	Call TI	Level-NC-NC-NC
SN54S74J	ACTIVE	CDIP	J	14	1	TBD	Call TI	Level-NC-NC-NC
SN7474DR	OBSOLETE	SOIC	D	14		TBD	Call TI	Call TI
SN7474DR	OBSOLETE	SOIC	D	14		TBD	Call TI	Call TI
SN7474N	OBSOLETE	PDIP	N	14		TBD	Call TI	Call TI
SN7474N	OBSOLETE	PDIP	N	14		TBD	Call TI	Call TI
SN7474N3	OBSOLETE	PDIP	N	14		TBD	Call TI	Call TI
SN7474N3	OBSOLETE	PDIP	N	14		TBD	Call TI	Call TI
SN74LS74AD	ACTIVE	SOIC	D	14	50	Green (RoHS & no Sb/Br)	CU NIPDAU	Level-1-260C-UNLIM
SN74LS74AD	ACTIVE	SOIC	D	14	50	Green (RoHS & no Sb/Br)	CU NIPDAU	Level-1-260C-UNLIM
SN74LS74ADBR	ACTIVE	SSOP	DB	14	2000	Green (RoHS & no Sb/Br)	CU NIPDAU	Level-1-260C-UNLIM
SN74LS74ADBR	ACTIVE	SSOP	DB	14	2000	Green (RoHS & no Sb/Br)	CU NIPDAU	Level-1-260C-UNLIM
SN74LS74ADBRE4	ACTIVE	SSOP	DB	14	2000	Green (RoHS & no Sb/Br)	CU NIPDAU	Level-1-260C-UNLIM
SN74LS74ADBRE4	ACTIVE	SSOP	DB	14	2000	Green (RoHS & no Sb/Br)	CU NIPDAU	Level-1-260C-UNLIM
SN74LS74ADE4	ACTIVE	SOIC	D	14	50	Green (RoHS & no Sb/Br)	CU NIPDAU	Level-1-260C-UNLIM
SN74LS74ADE4	ACTIVE	SOIC	D	14	50	Green (RoHS &	CU NIPDAU	Level-1-260C-UNLIM

Orderable Device	Status (1)	Package Type	Package Drawing	Pins	Package Qty	Eco Plan (2)	Lead/Ball Finish	MSL Peak Temp (3)
						no Sb/Br)		
SN74LS74ADR	ACTIVE	SOIC	D	14	2500	Green (RoHS & no Sb/Br)	CU NIPDAU	Level-1-260C-UNLIM
SN74LS74ADR	ACTIVE	SOIC	D	14	2500	Green (RoHS & no Sb/Br)	CU NIPDAU	Level-1-260C-UNLIM
SN74LS74ADRE4	ACTIVE	SOIC	D	14	2500	Green (RoHS & no Sb/Br)	CU NIPDAU	Level-1-260C-UNLIM
SN74LS74ADRE4	ACTIVE	SOIC	D	14	2500	Green (RoHS & no Sb/Br)	CU NIPDAU	Level-1-260C-UNLIM
SN74LS74AJ	OBSOLETE	CDIP	J	14		TBD	Call TI	Call TI
SN74LS74AJ	OBSOLETE	CDIP	J	14		TBD	Call TI	Call TI
SN74LS74AN	ACTIVE	PDIP	N	14	25	Pb-Free (RoHS)	CU NIPDAU	Level-NC-NC-NC
SN74LS74AN	ACTIVE	PDIP	N	14	25	Pb-Free (RoHS)	CU NIPDAU	Level-NC-NC-NC
SN74LS74AN3	OBSOLETE	PDIP	N	14		TBD	Call TI	Call TI
SN74LS74AN3	OBSOLETE	PDIP	N	14		TBD	Call TI	Call TI
SN74LS74ANE4	ACTIVE	PDIP	N	14	25	Pb-Free (RoHS)	CU NIPDAU	Level-NC-NC-NC
SN74LS74ANE4	ACTIVE	PDIP	N	14	25	Pb-Free (RoHS)	CU NIPDAU	Level-NC-NC-NC
SN74LS74ANSR	ACTIVE	SO	NS	14	2000	Green (RoHS & no Sb/Br)	CU NIPDAU	Level-1-260C-UNLIM
SN74LS74ANSR	ACTIVE	SO	NS	14	2000	Green (RoHS & no Sb/Br)	CU NIPDAU	Level-1-260C-UNLIM
SN74LS74ANSRG4	ACTIVE	SO	NS	14	2000	Green (RoHS & no Sb/Br)	CU NIPDAU	Level-1-260C-UNLIM
SN74LS74ANSRG4	ACTIVE	SO	NS	14	2000	Green (RoHS & no Sb/Br)	CU NIPDAU	Level-1-260C-UNLIM
SN74S74D	ACTIVE	SOIC	D	14	50	Green (RoHS & no Sb/Br)	CU NIPDAU	Level-1-260C-UNLIM
SN74S74D	ACTIVE	SOIC	D	14	50	Green (RoHS & no Sb/Br)	CU NIPDAU	Level-1-260C-UNLIM
SN74S74DE4	ACTIVE	SOIC	D	14	50	Green (RoHS & no Sb/Br)	CU NIPDAU	Level-1-260C-UNLIM
SN74S74DE4	ACTIVE	SOIC	D	14	50	Green (RoHS & no Sb/Br)	CU NIPDAU	Level-1-260C-UNLIM
SN74S74DR	ACTIVE	SOIC	D	14	2500	Green (RoHS & no Sb/Br)	CU NIPDAU	Level-1-260C-UNLIM
SN74S74DR	ACTIVE	SOIC	D	14	2500	Green (RoHS & no Sb/Br)	CU NIPDAU	Level-1-260C-UNLIM
SN74S74DRE4	ACTIVE	SOIC	D	14	2500	Green (RoHS & no Sb/Br)	CU NIPDAU	Level-1-260C-UNLIM
SN74S74DRE4	ACTIVE	SOIC	D	14	2500	Green (RoHS & no Sb/Br)	CU NIPDAU	Level-1-260C-UNLIM
SN74S74N	ACTIVE	PDIP	N	14	25	Pb-Free (RoHS)	CU NIPDAU	Level-NC-NC-NC
SN74S74N	ACTIVE	PDIP	N	14	25	Pb-Free (RoHS)	CU NIPDAU	Level-NC-NC-NC
SN74S74N3	OBSOLETE	PDIP	N	14		TBD	Call TI	Call TI

Orderable Device	Status [1]	Package Type	Package Drawing	Pins	Package Qty	Eco Plan [2]	Lead/Ball Finish	MSL Peak Temp [3]
SN74S74N3	OBSOLETE	PDIP	N	14		TBD	Call TI	Call TI
SN74S74NE4	ACTIVE	PDIP	N	14	25	Pb-Free (RoHS)	CU NIPDAU	Level-NC-NC-NC
SN74S74NE4	ACTIVE	PDIP	N	14	25	Pb-Free (RoHS)	CU NIPDAU	Level-NC-NC-NC
SN74S74NSR	ACTIVE	SO	NS	14	2000	Green (RoHS & no Sb/Br)	CU NIPDAU	Level-1-260C-UNLIM
SN74S74NSR	ACTIVE	SO	NS	14	2000	Green (RoHS & no Sb/Br)	CU NIPDAU	Level-1-260C-UNLIM
SN74S74NSRE4	ACTIVE	SO	NS	14	2000	Green (RoHS & no Sb/Br)	CU NIPDAU	Level-1-260C-UNLIM
SN74S74NSRE4	ACTIVE	SO	NS	14	2000	Green (RoHS & no Sb/Br)	CU NIPDAU	Level-1-260C-UNLIM
SNJ5474J	OBSOLETE	CDIP	J	14		TBD	Call TI	Call TI
SNJ5474J	OBSOLETE	CDIP	J	14		TBD	Call TI	Call TI
SNJ5474W	OBSOLETE	CFP	W	14		TBD	Call TI	Call TI
SNJ5474W	OBSOLETE	CFP	W	14		TBD	Call TI	Call TI
SNJ54LS74AFK	ACTIVE	LCCC	FK	20	1	TBD	Call TI	Level-NC-NC-NC
SNJ54LS74AFK	ACTIVE	LCCC	FK	20	1	TBD	Call TI	Level-NC-NC-NC
SNJ54LS74AJ	ACTIVE	CDIP	J	14	1	TBD	Call TI	Level-NC-NC-NC
SNJ54LS74AJ	ACTIVE	CDIP	J	14	1	TBD	Call TI	Level-NC-NC-NC
SNJ54LS74AW	ACTIVE	CFP	W	14	1	TBD	Call TI	Level-NC-NC-NC
SNJ54LS74AW	ACTIVE	CFP	W	14	1	TBD	Call TI	Level-NC-NC-NC
SNJ54S74FK	ACTIVE	LCCC	FK	20	1	TBD	Call TI	Level-NC-NC-NC
SNJ54S74FK	ACTIVE	LCCC	FK	20	1	TBD	Call TI	Level-NC-NC-NC
SNJ54S74J	ACTIVE	CDIP	J	14	1	TBD	Call TI	Level-NC-NC-NC
SNJ54S74J	ACTIVE	CDIP	J	14	1	TBD	Call TI	Level-NC-NC-NC
SNJ54S74W	ACTIVE	CFP	W	14	1	TBD	Call TI	Level-NC-NC-NC
SNJ54S74W	ACTIVE	CFP	W	14	1	TBD	Call TI	Level-NC-NC-NC

[1] The marketing status values are defined as follows:
ACTIVE: Product device recommended for new designs.
LIFEBUY: TI has announced that the device will be discontinued, and a lifetime-buy period is in effect.
NRND: Not recommended for new designs. Device is in production to support existing customers, but TI does not recommend using this part in a new design.
PREVIEW: Device has been announced but is not in production. Samples may or may not be available.
OBSOLETE: TI has discontinued the production of the device.

[2] Eco Plan - The planned eco-friendly classification: Pb-Free (RoHS) or Green (RoHS & no Sb/Br) - please check http://www.ti.com/productcontent for the latest availability information and additional product content details.
TBD: The Pb-Free/Green conversion plan has not been defined.
Pb-Free (RoHS): TI's terms "Lead-Free" or "Pb-Free" mean semiconductor products that are compatible with the current RoHS requirements for all 6 substances, including the requirement that lead not exceed 0.1% by weight in homogeneous materials. Where designed to be soldered at high temperatures, TI Pb-Free products are suitable for use in specified lead-free processes.
Green (RoHS & no Sb/Br): TI defines "Green" to mean Pb-Free (RoHS compatible), and free of Bromine (Br) and Antimony (Sb) based flame retardants (Br or Sb do not exceed 0.1% by weight in homogeneous material)

[3] MSL, Peak Temp. -- The Moisture Sensitivity Level rating according to the JEDEC industry standard classifications, and peak solder temperature.

Important Information and Disclaimer: The information provided on this page represents TI's knowledge and belief as of the date that it is

provided. TI bases its knowledge and belief on information provided by third parties, and makes no representation or warranty as to the accuracy of such information. Efforts are underway to better integrate information from third parties. TI has taken and continues to take reasonable steps to provide representative and accurate information but may not have conducted destructive testing or chemical analysis on incoming materials and chemicals. TI and TI suppliers consider certain information to be proprietary, and thus CAS numbers and other limited information may not be available for release.

In no event shall TI's liability arising out of such information exceed the total purchase price of the TI part(s) at issue in this document sold by TI to Customer on an annual basis.

J (R–GDIP–T**) CERAMIC DUAL IN–LINE PACKAGE

14 LEADS SHOWN

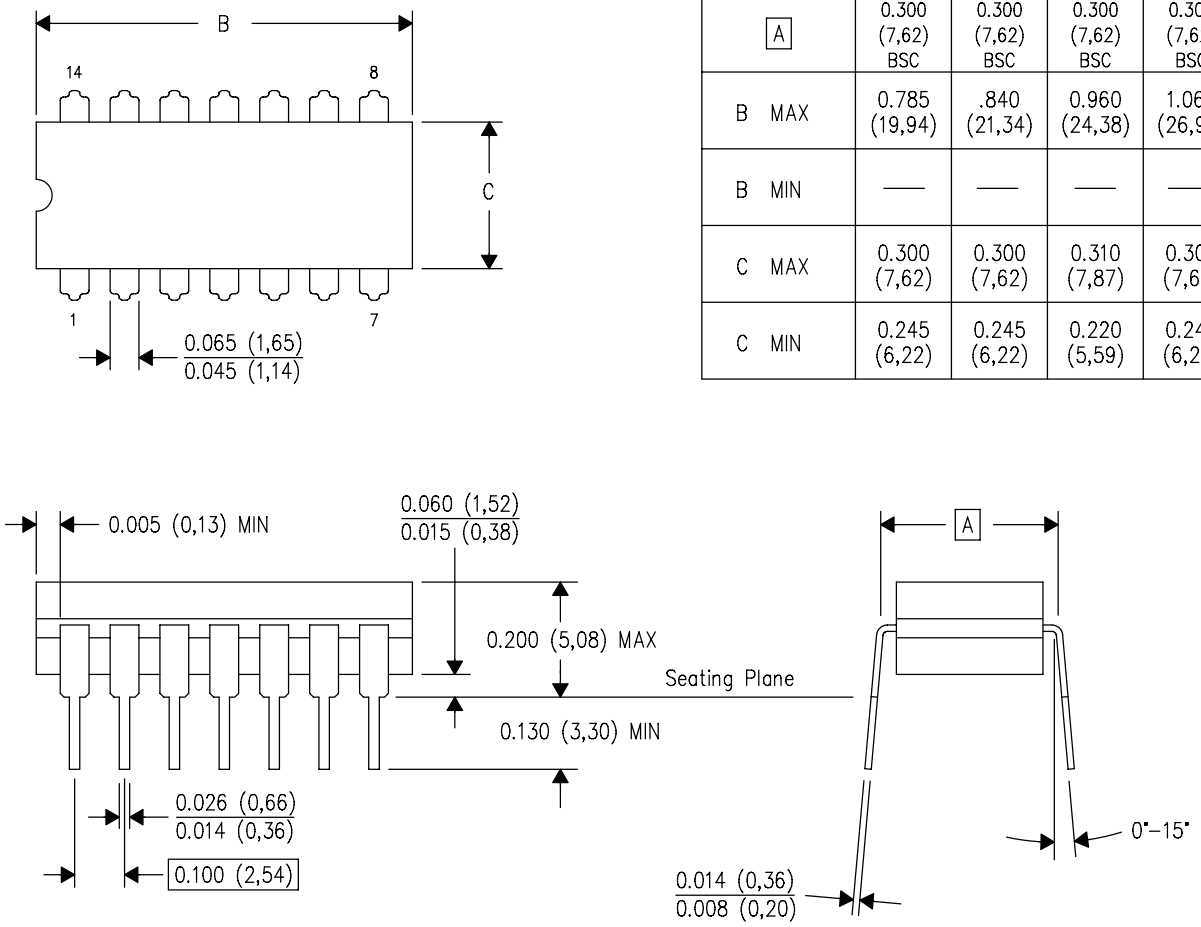

DIM \ PINS **	14	16	18	20
A	0.300 (7,62) BSC	0.300 (7,62) BSC	0.300 (7,62) BSC	0.300 (7,62) BSC
B MAX	0.785 (19,94)	.840 (21,34)	0.960 (24,38)	1.060 (26,92)
B MIN	—	—	—	—
C MAX	0.300 (7,62)	0.300 (7,62)	0.310 (7,87)	0.300 (7,62)
C MIN	0.245 (6,22)	0.245 (6,22)	0.220 (5,59)	0.245 (6,22)

4040083/F 03/03

NOTES:
- A. All linear dimensions are in inches (millimeters).
- B. This drawing is subject to change without notice.
- C. This package is hermetically sealed with a ceramic lid using glass frit.
- D. Index point is provided on cap for terminal identification only on press ceramic glass frit seal only.
- E. Falls within MIL STD 1835 GDIP1–T14, GDIP1–T16, GDIP1–T18 and GDIP1–T20.

W (R–GDFP–F14) CERAMIC DUAL FLATPACK

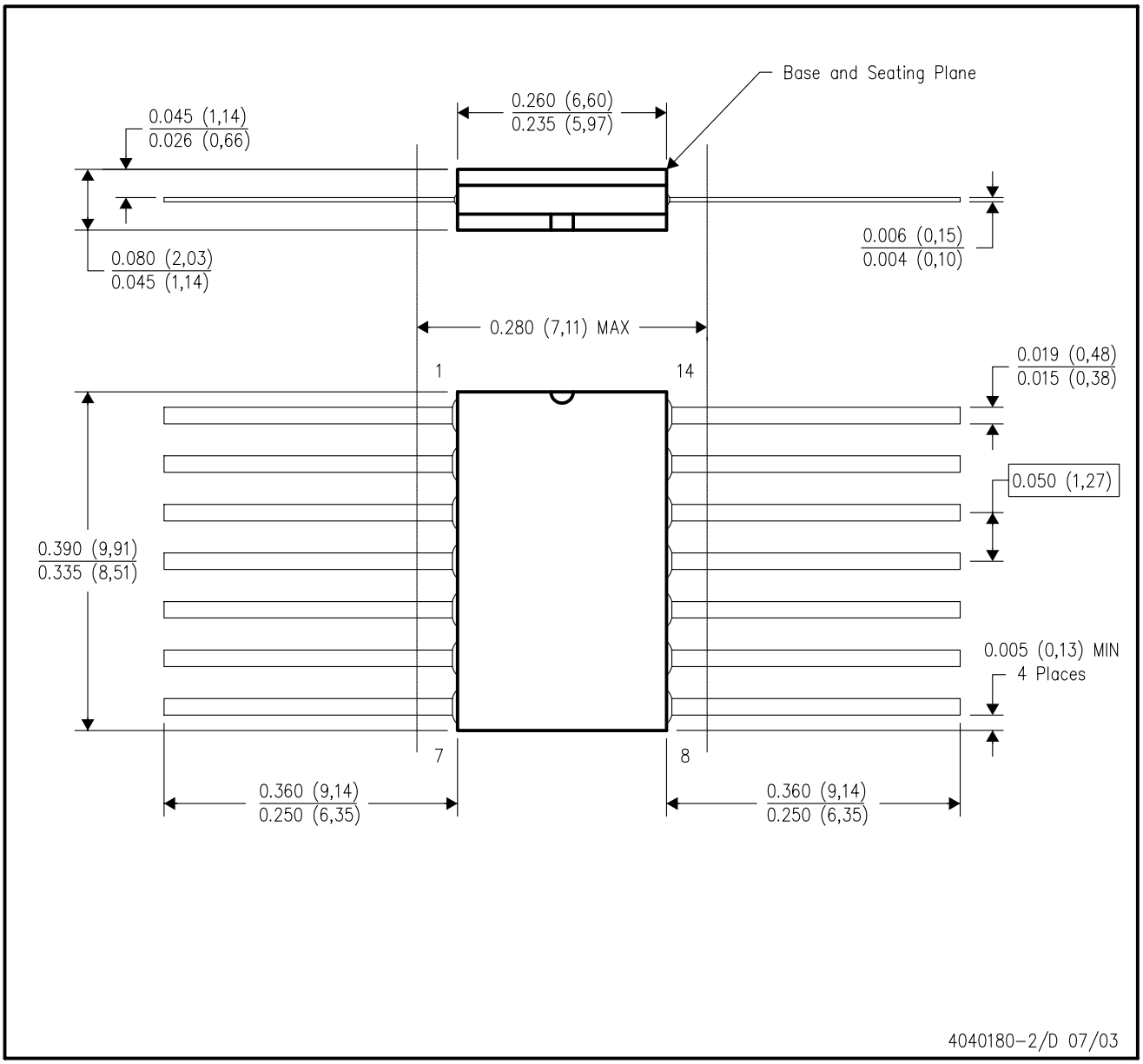

NOTES:
A. All linear dimensions are in inches (millimeters).
B. This drawing is subject to change without notice.
C. This package can be hermetically sealed with a ceramic lid using glass frit.
D. Index point is provided on cap for terminal identification only.
E. Falls within MIL STD 1835 GDFP1–F14 and JEDEC MO–092AB

FK (S-CQCC-N**)

LEADLESS CERAMIC CHIP CARRIER

28 TERMINAL SHOWN

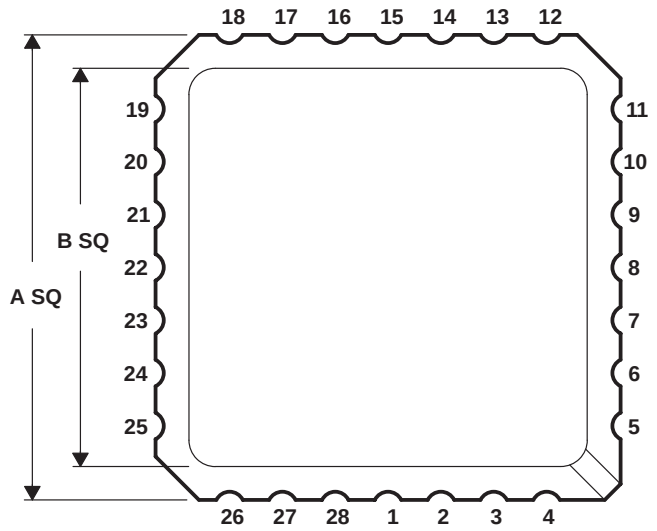

NO. OF TERMINALS **	A		B	
	MIN	MAX	MIN	MAX
20	0.342 (8,69)	0.358 (9,09)	0.307 (7,80)	0.358 (9,09)
28	0.442 (11,23)	0.458 (11,63)	0.406 (10,31)	0.458 (11,63)
44	0.640 (16,26)	0.660 (16,76)	0.495 (12,58)	0.560 (14,22)
52	0.739 (18,78)	0.761 (19,32)	0.495 (12,58)	0.560 (14,22)
68	0.938 (23,83)	0.962 (24,43)	0.850 (21,6)	0.858 (21,8)
84	1.141 (28,99)	1.165 (29,59)	1.047 (26,6)	1.063 (27,0)

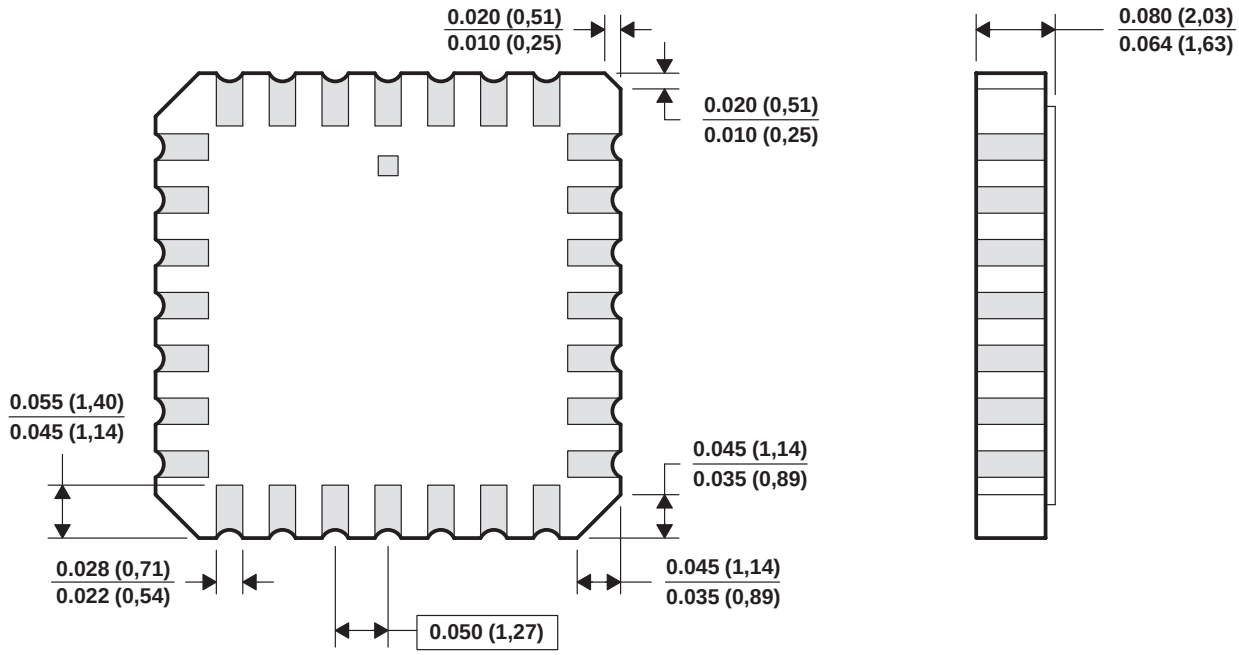

4040140/D 10/96

NOTES:
A. All linear dimensions are in inches (millimeters).
B. This drawing is subject to change without notice.
C. This package can be hermetically sealed with a metal lid.
D. The terminals are gold plated.
E. Falls within JEDEC MS-004

N (R–PDIP–T**) PLASTIC DUAL–IN–LINE PACKAGE

16 PINS SHOWN

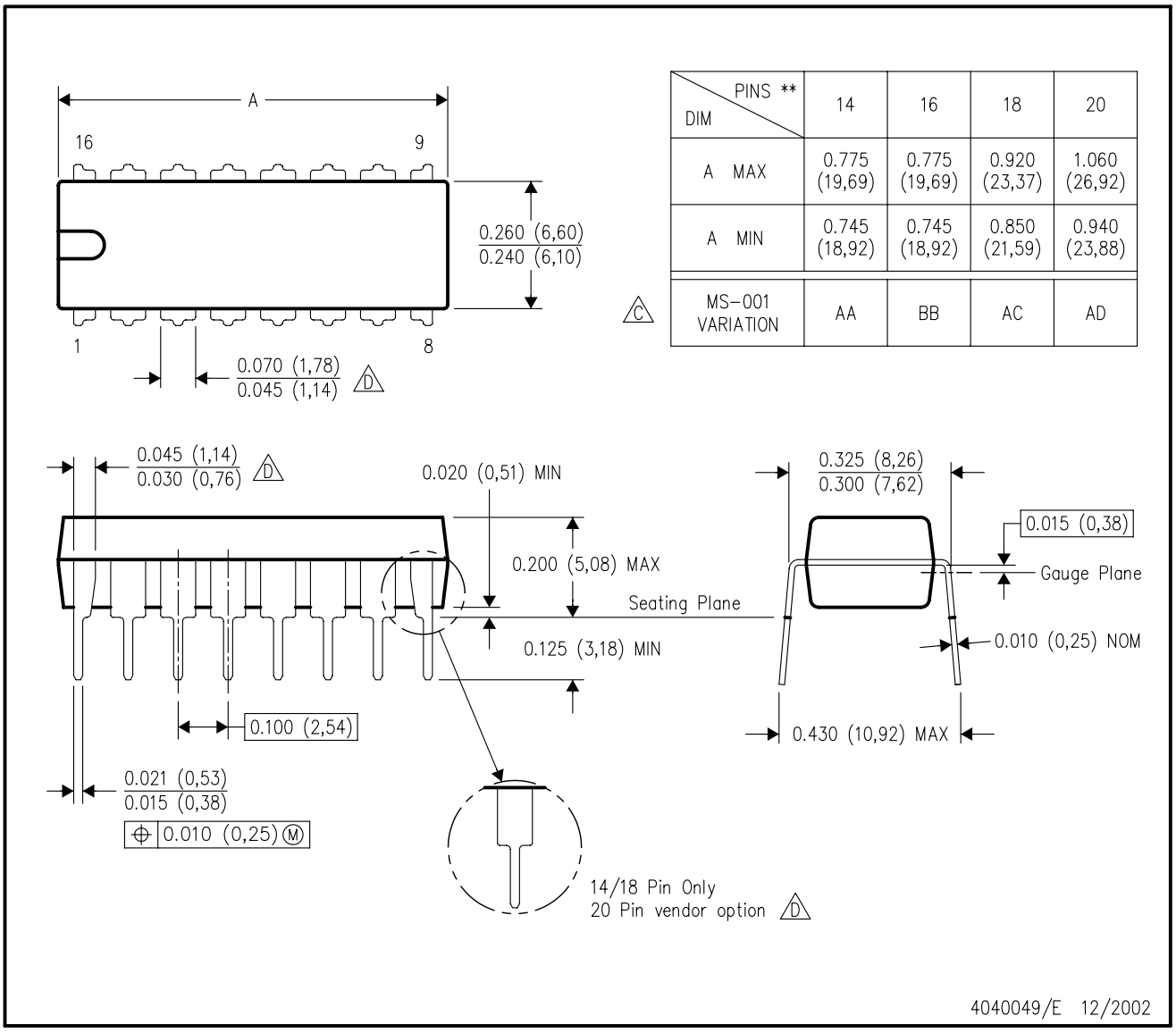

DIM \ PINS **	14	16	18	20
A MAX	0.775 (19,69)	0.775 (19,69)	0.920 (23,37)	1.060 (26,92)
A MIN	0.745 (18,92)	0.745 (18,92)	0.850 (21,59)	0.940 (23,88)
MS–001 VARIATION (C)	AA	BB	AC	AD

NOTES:
A. All linear dimensions are in inches (millimeters).
B. This drawing is subject to change without notice.
C. Falls within JEDEC MS–001, except 18 and 20 pin minimum body length (Dim A).
D. The 20 pin end lead shoulder width is a vendor option, either half or full width.

D (R–PDSO–G14) PLASTIC SMALL–OUTLINE PACKAGE

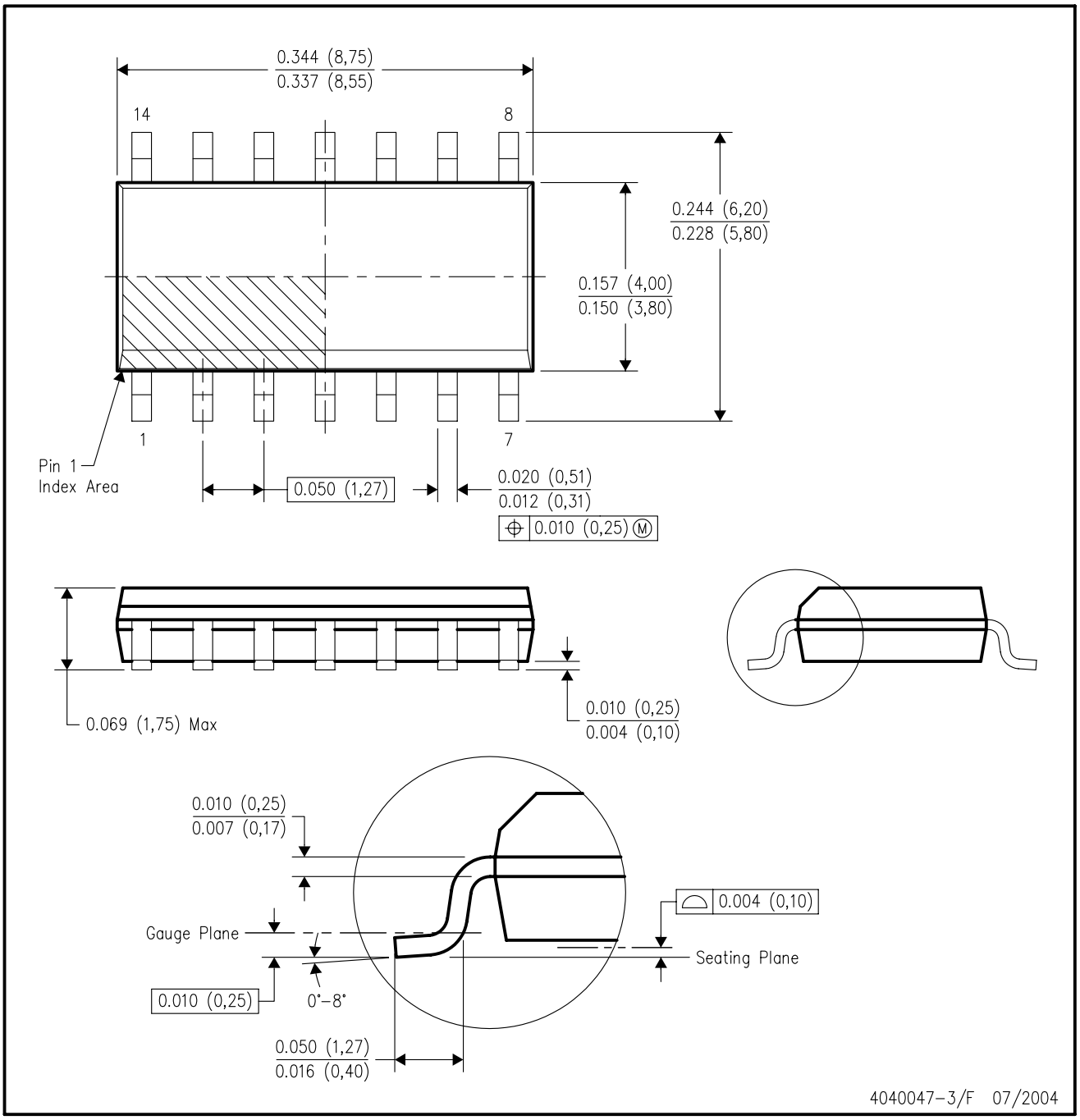

NOTES:
A. All linear dimensions are in inches (millimeters).
B. This drawing is subject to change without notice.
C. Body dimensions do not include mold flash or protrusion not to exceed 0.006 (0,15).
D. Falls within JEDEC MS–012 variation AB.

MECHANICAL DATA

NS (R-PDSO-G)** **PLASTIC SMALL-OUTLINE PACKAGE**

14-PINS SHOWN

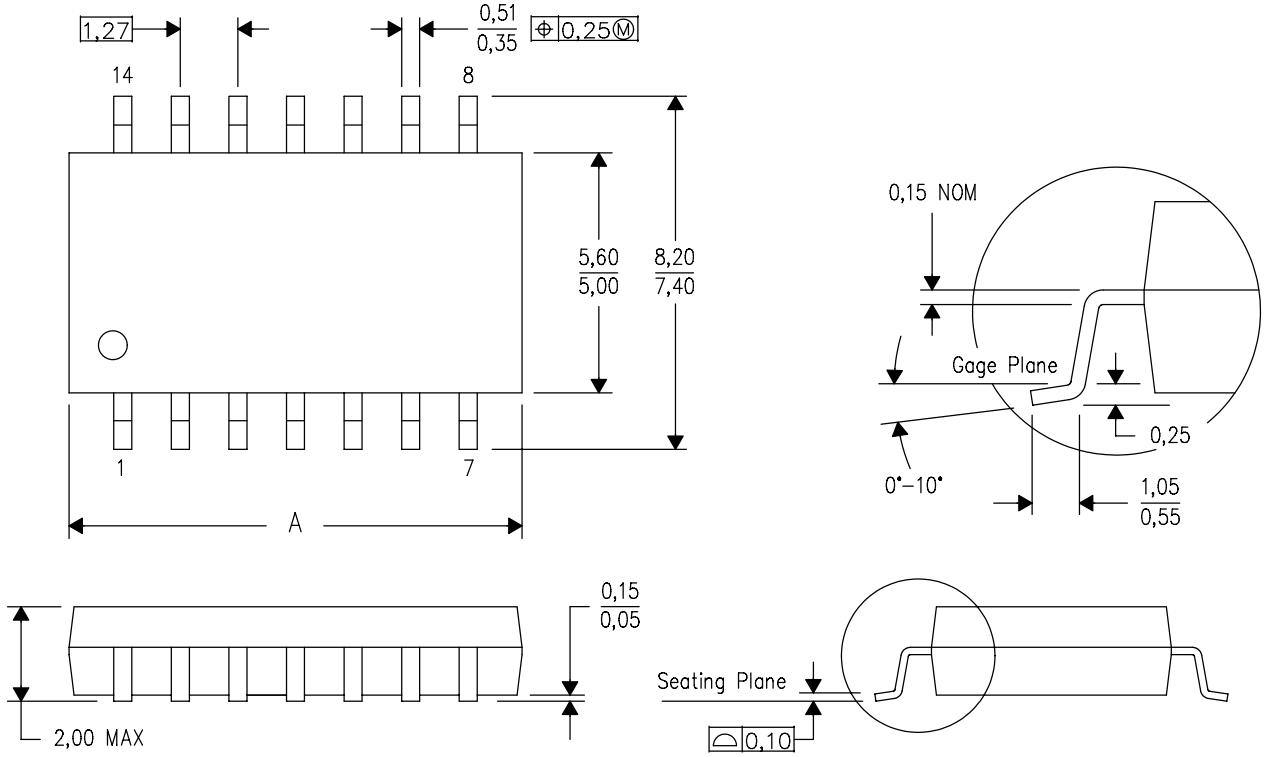

DIM \ PINS **	14	16	20	24
A MAX	10,50	10,50	12,90	15,30
A MIN	9,90	9,90	12,30	14,70

4040062/C 03/03

NOTES:
A. All linear dimensions are in millimeters.
B. This drawing is subject to change without notice.
C. Body dimensions do not include mold flash or protrusion, not to exceed 0,15.

DB (R-PDSO-G)** **PLASTIC SMALL-OUTLINE**

28 PINS SHOWN

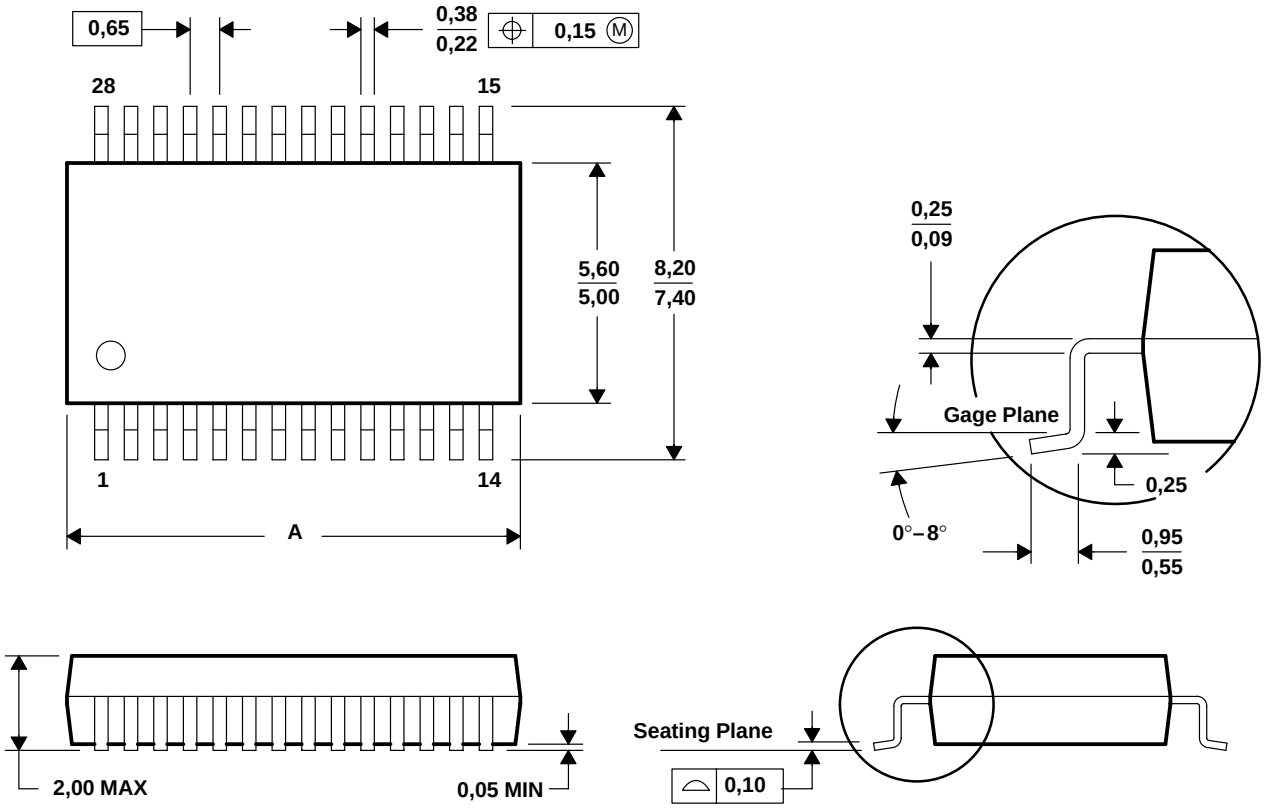

DIM \ PINS **	14	16	20	24	28	30	38
A MAX	6,50	6,50	7,50	8,50	10,50	10,50	12,90
A MIN	5,90	5,90	6,90	7,90	9,90	9,90	12,30

4040065 /E 12/01

NOTES: A. All linear dimensions are in millimeters.
B. This drawing is subject to change without notice.
C. Body dimensions do not include mold flash or protrusion not to exceed 0,15.
D. Falls within JEDEC MO-150

IMPORTANT NOTICE

Texas Instruments Incorporated and its subsidiaries (TI) reserve the right to make corrections, modifications, enhancements, improvements, and other changes to its products and services at any time and to discontinue any product or service without notice. Customers should obtain the latest relevant information before placing orders and should verify that such information is current and complete. All products are sold subject to TI's terms and conditions of sale supplied at the time of order acknowledgment.

TI warrants performance of its hardware products to the specifications applicable at the time of sale in accordance with TI's standard warranty. Testing and other quality control techniques are used to the extent TI deems necessary to support this warranty. Except where mandated by government requirements, testing of all parameters of each product is not necessarily performed.

TI assumes no liability for applications assistance or customer product design. Customers are responsible for their products and applications using TI components. To minimize the risks associated with customer products and applications, customers should provide adequate design and operating safeguards.

TI does not warrant or represent that any license, either express or implied, is granted under any TI patent right, copyright, mask work right, or other TI intellectual property right relating to any combination, machine, or process in which TI products or services are used. Information published by TI regarding third-party products or services does not constitute a license from TI to use such products or services or a warranty or endorsement thereof. Use of such information may require a license from a third party under the patents or other intellectual property of the third party, or a license from TI under the patents or other intellectual property of TI.

Reproduction of information in TI data books or data sheets is permissible only if reproduction is without alteration and is accompanied by all associated warranties, conditions, limitations, and notices. Reproduction of this information with alteration is an unfair and deceptive business practice. TI is not responsible or liable for such altered documentation.

Resale of TI products or services with statements different from or beyond the parameters stated by TI for that product or service voids all express and any implied warranties for the associated TI product or service and is an unfair and deceptive business practice. TI is not responsible or liable for any such statements.

Following are URLs where you can obtain information on other Texas Instruments products and application solutions:

Products		**Applications**	
Amplifiers	amplifier.ti.com	Audio	www.ti.com/audio
Data Converters	dataconverter.ti.com	Automotive	www.ti.com/automotive
DSP	dsp.ti.com	Broadband	www.ti.com/broadband
Interface	interface.ti.com	Digital Control	www.ti.com/digitalcontrol
Logic	logic.ti.com	Military	www.ti.com/military
Power Mgmt	power.ti.com	Optical Networking	www.ti.com/opticalnetwork
Microcontrollers	microcontroller.ti.com	Security	www.ti.com/security
		Telephony	www.ti.com/telephony
		Video & Imaging	www.ti.com/video
		Wireless	www.ti.com/wireless

Mailing Address: Texas Instruments
Post Office Box 655303 Dallas, Texas 75265

Copyright © 2005, Texas Instruments Incorporated